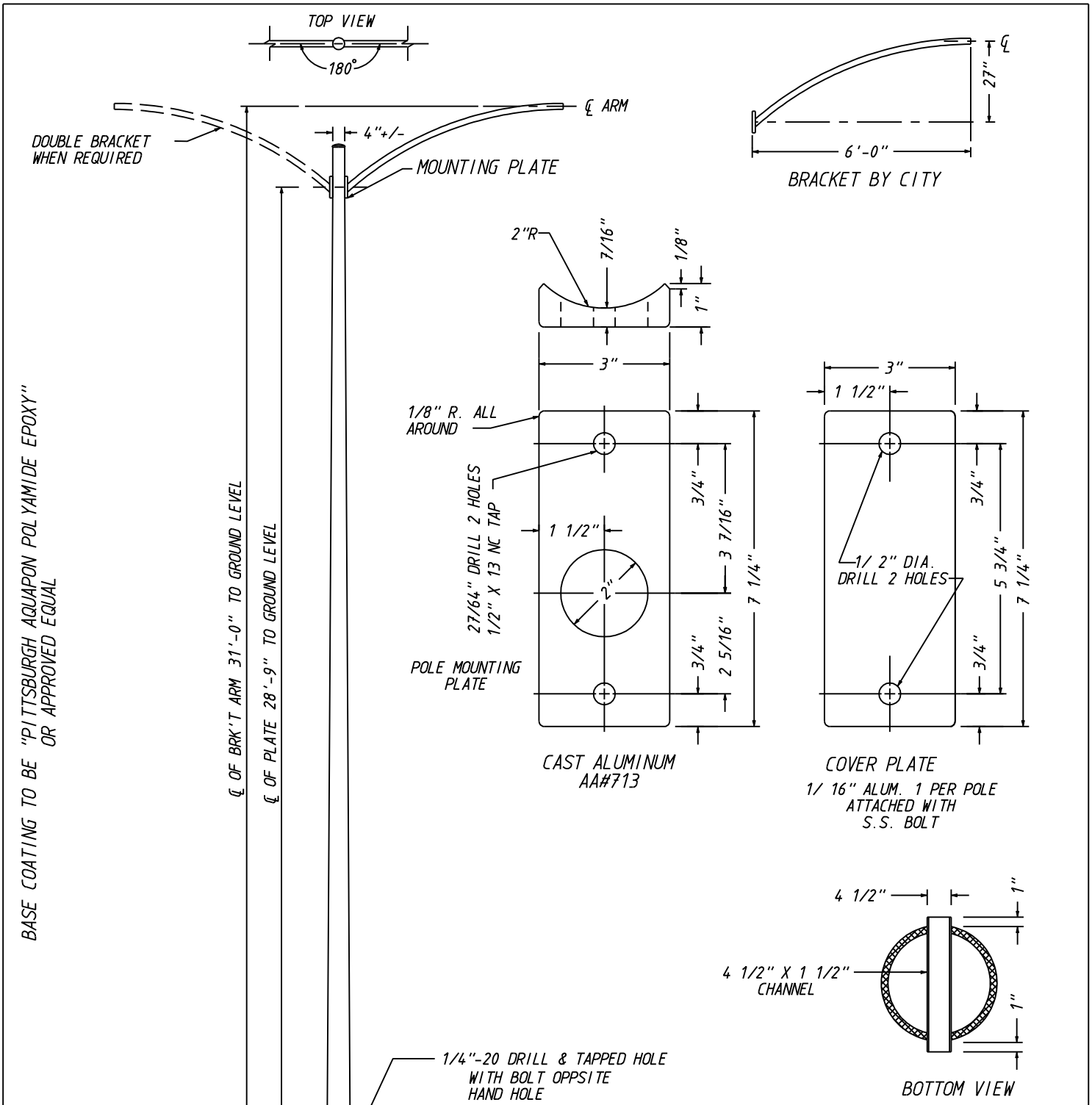

REVISED DATE:		REVISED BY:			
TRANSFERRED TO COMPUTER				DATE: 08-23-05	
SPEC.NO. 12c-C-2		REV. 04-28-87			
DIRECT BURIED ALUMINUM POLE 31' MOUNTING HEIGHT 6' UPSWEEP BRACKET					
CITY OF MILWAUKEE D.P.W. TRANSPORTATION SECTION INFRASTRUCTURE SERVICES DIVISION					
STREET LIGHTING DIVISION					
DATE 10-27-86	SCALE: NONE	DRAWN L.H.R.	DESIGN J.R.P.	CHECKED	APPROVED J.R.P.
SUPERSEDES C-71-20		DRG. # B-86-33			
SUPERSEDED BY					

PLOTDATE
FILEPATH

...\31FtAlumPoleDirectBury.dgn 8/24/2005 10:12:51 AM